Core Memory

Nano ESP32 Board

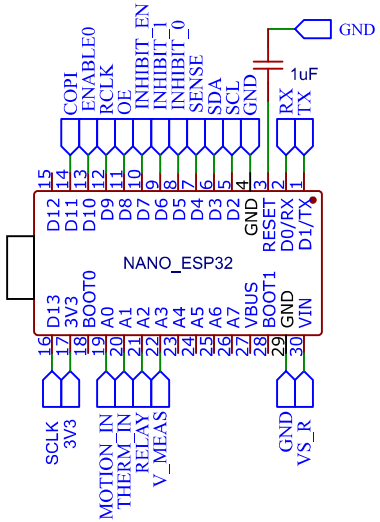

ESP32 Reset Circuit

Nano ESP32 Board has a 5k pull up from RESET to +3.3V

Sense

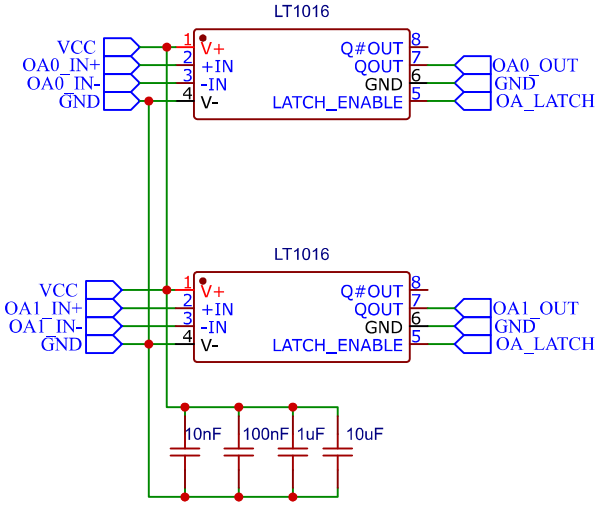

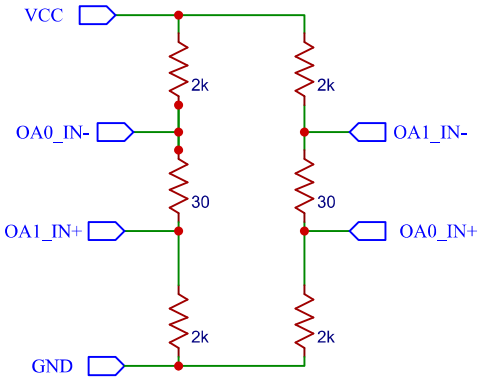

Two sense circuits combined

Buffers / Level Shifters

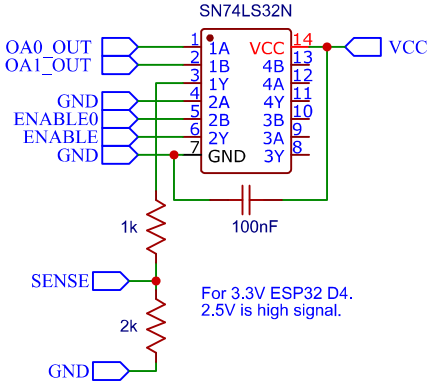

For 3.3V ESP32 D4.
2.5V is high signal.

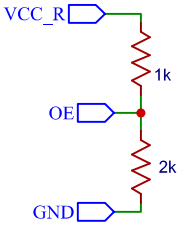

Shift register OE active low.
Pulled high on startup.

Op Amp Latch Timer

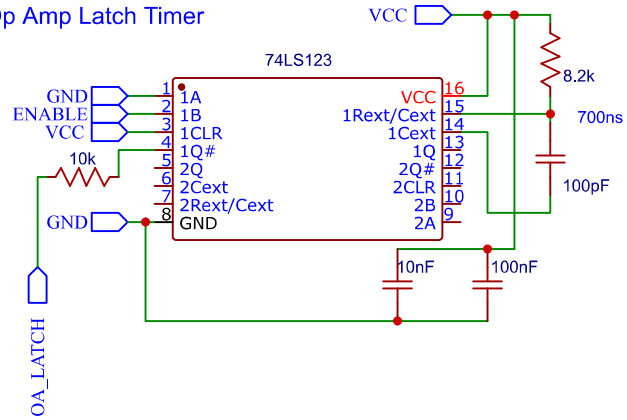

*** Note - See post production changes hand wired on board on Sheet 7.

TITLE: Core Memory		REV: 1.0
EasyEDA	Company:	Sheet: 1/7
	Date: 2025-10-17 Drawn By: jpwolfe31	

Serial Output Expander

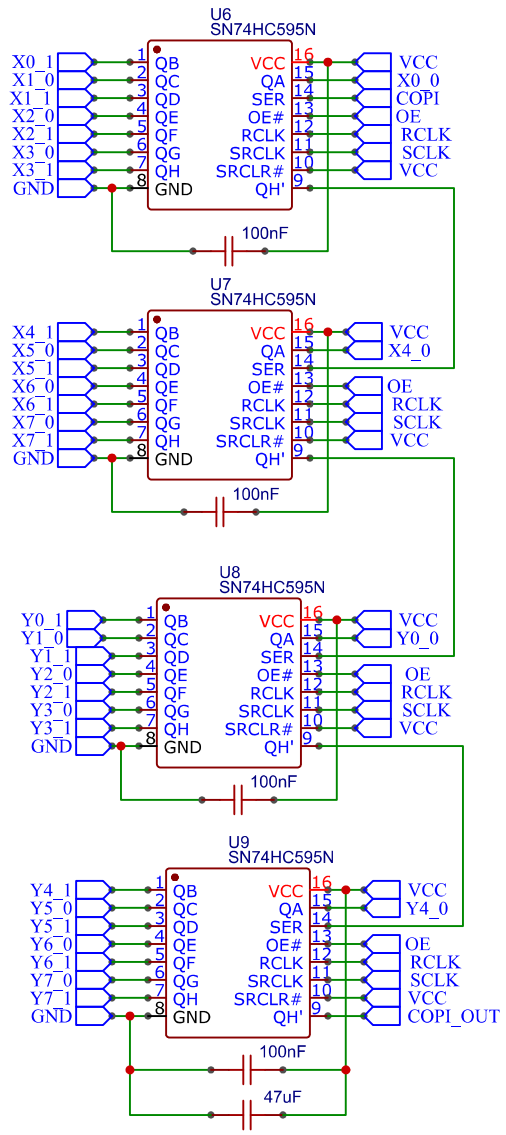

TITLE: Core Memory		REV: 1.0
EasyEDA	Company:	Sheet: 2/7
	Date: 2025-10-17 Drawn By: jpwolfe31	

Drive X

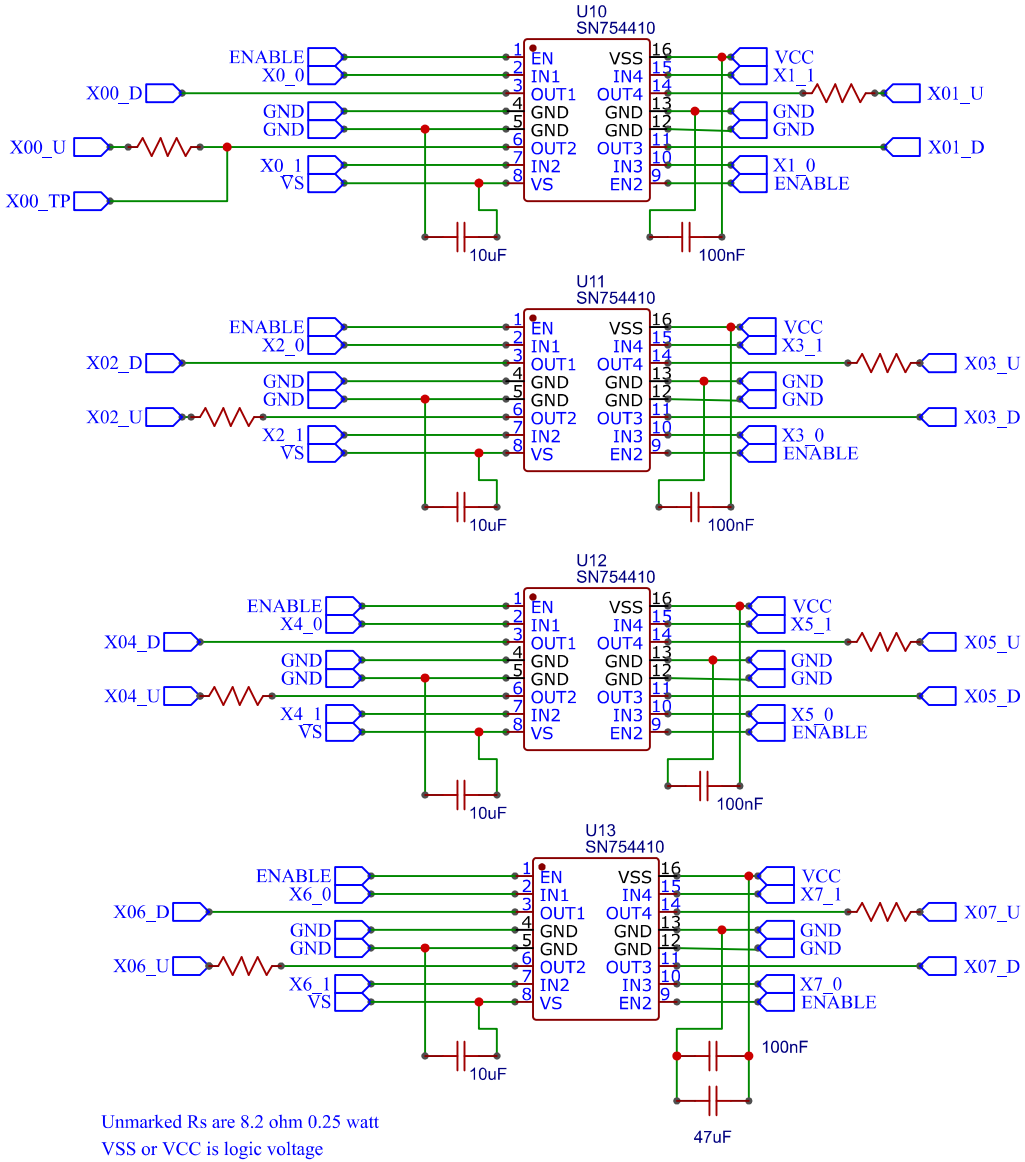

Unmarked Rs are 8.2 ohm 0.25 watt
VSS or VCC is logic voltage
VS is drive voltage

Inhibit

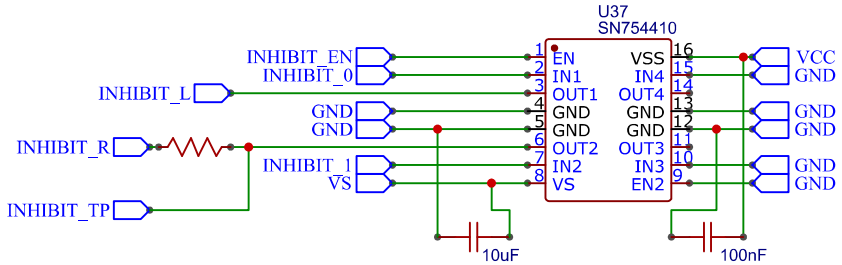

TITLE: Core Memory		REV: 1.0
EasyEDA	Company:	Sheet: 3/7
	Date: 2025-10-17 Drawn By: jpwolfe31	

Drive Y

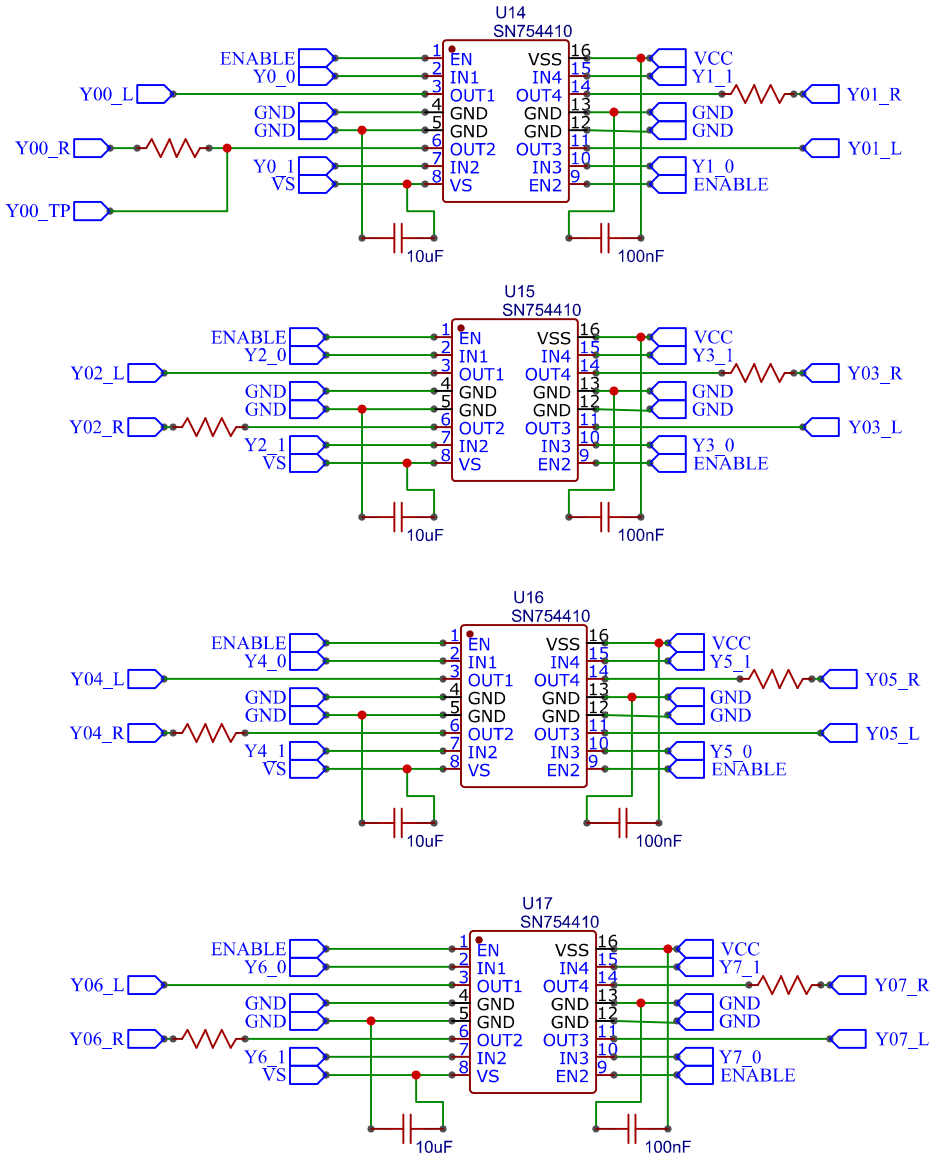

TITLE: Core Memory		REV: 1.0
EasyEDA	Company:	Sheet: 4/7
	Date: 2025-10-17 Drawn By: jpwolfe31	

Input switches

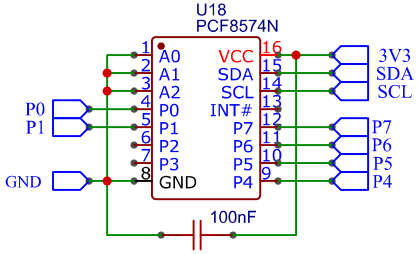

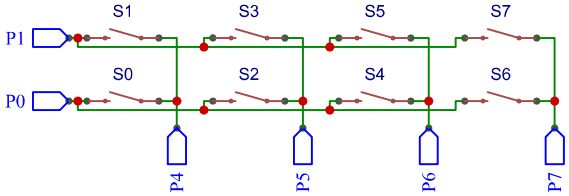

OLED

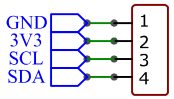

Motion detector

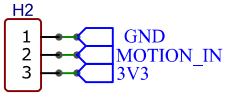

Thermistor

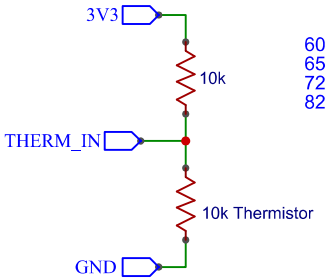

60 deg is 1.46V
65 deg is 1.40V
72 deg is 1.52V
82 deg is 1.63V
fix

Cooler temps may require more drive current (voltage).

OLED i2c pullups

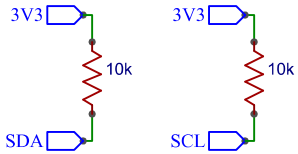

TITLE: Core Memory		REV: 1.0
EasyEDA	Company:	Sheet: 5/7
	Date: 2025-10-17 Drawn By: jpwolfe31	

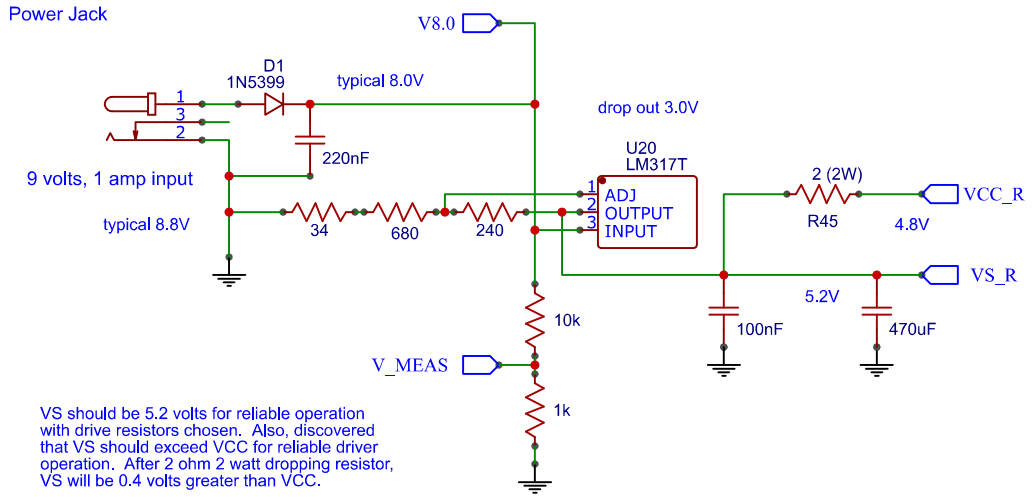

VS should be 5.2 volts for reliable operation with drive resistors chosen. Also, discovered that VS should exceed VCC for reliable driver operation. After 2 ohm 2 watt dropping resistor, VS will be 0.4 volts greater than VCC.

When uploading firmware to the Nano-ESP32 over USB, VS must exceed the USB voltage or the voltage regulator will overheat. 5.2 volts on VS appears to prevent this.

DC current requirements:
- 40 mA - ESP32
- 50 mA - OLED display
- 210 mA - Drive circuitry
- 10 mA - VS drive
- 310 mA - total

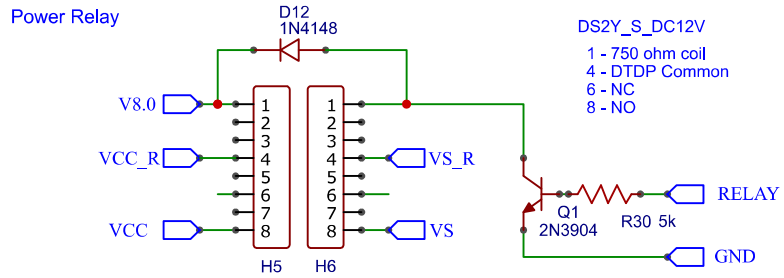

Relay limits power consumption and regulator temperature.
Also provides clicking feedback.

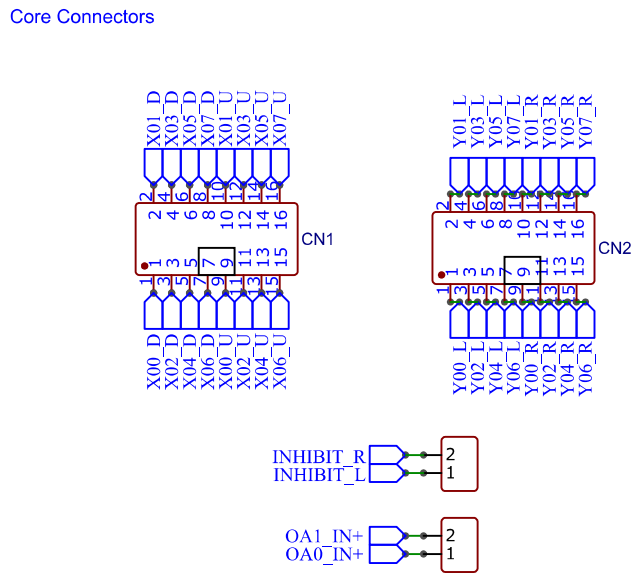

TITLE: Core Memory		REV: 1.0
EasyEDA	Company:	Sheet: 6/7
	Date: 2025-10-17 Drawn By: jpwolfe31	

Test Points

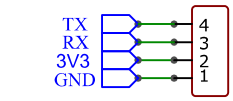

Lower left side of board

Center area of board

Center area of board

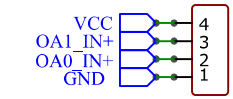

Center area of board

Center area of board

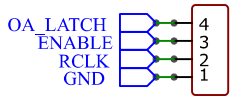

Lower right side of board

Other Test Points
(hand wired on board)

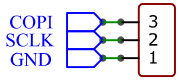

Upper left side of board

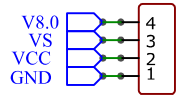

Left of OLED

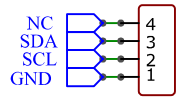

Upper right side of board

**** Post production changes to board ****
(hand wired on board)

Sheet 1 added VS_MEAS to A4 with 2k resistor from VS_R to A4 and 1k resistor from A4 to GND.

Sheet 1 deleted 10k resistor to OA_LATCH by shorting resistor.

Sheet 6 changed 34 resistor to 120 resistor and added 0-100 pot across this new resistor to enable adjustment of VS_R from 4.9 to 5.2 volts (new parallel resistance range is 0-54).

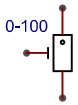

Sheet 6 added 470uF capacitor from VS to GND to help support SN754410 driver current needs.

Sheet 6 added two pushbutton switches top of board to connect OA0_IN+ and OA1_IN+ together for sense line error testing. Another switch connects INHIBIT_L and INHIBIT_R together for inhibit error testing.

Possible expansion bus under OLED
(not on board)

Expansion Boards have:
4 SN754410
2 74HC595
1 buffer ic

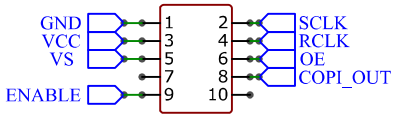

COPI_OUT will need more work if there is chaining.
Solder jumpers or break cable wires to allow out
from one to go to in on another?

TITLE: Core Memory		REV: 1.0
EasyEDA	Company:	Sheet: 7/7
	Date: 2025-10-17 Drawn By: jpwolfe31	